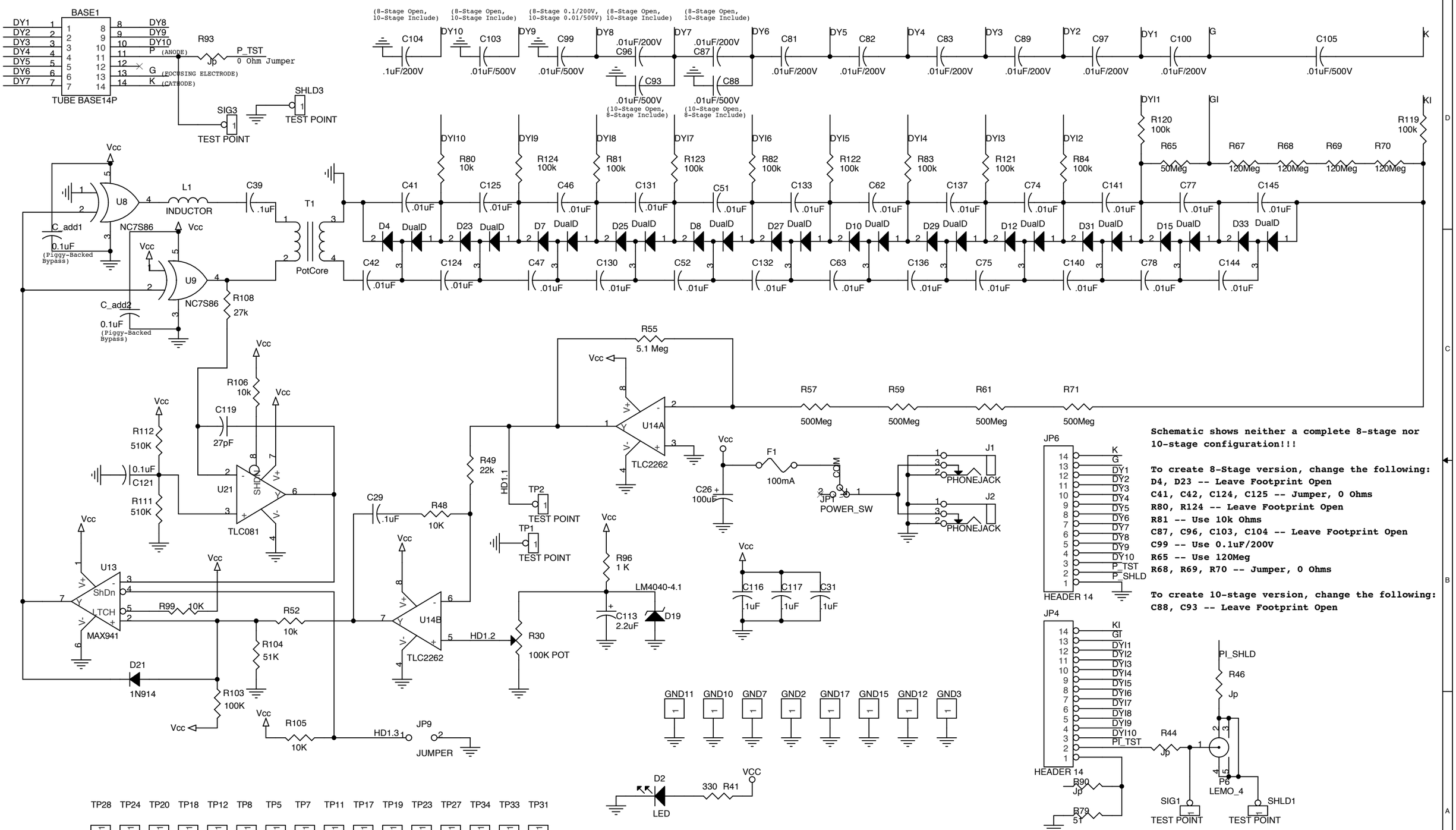

Schematic shows neither a complete 8-stage nor 10-stage configuration!!!

To create 8-Stage version, change the following:
D4, D23 -- Leave Footprint Open
C41, C42, C124, C125 -- Jumper, 0 Ohms
R80, R124 -- Leave Footprint Open
R81 -- Use 10k Ohms
C87, C96, C103, C104 -- Leave Footprint Open
C99 -- Use 0.1uF/200V
R65 -- Use 120Meg
R68, R69, R70 -- Jumper, 0 Ohms

To create 10-stage version, change the following:
C88, C93 -- Leave Footprint Open

HV Base and Disk VERSION 1

Title	8/10 Stage PMT Base Version 1
Size B	Document Number <Doc>
Rev	<RevCode>
Date: Thursday, June 28, 2001	Sheet 1 of 1